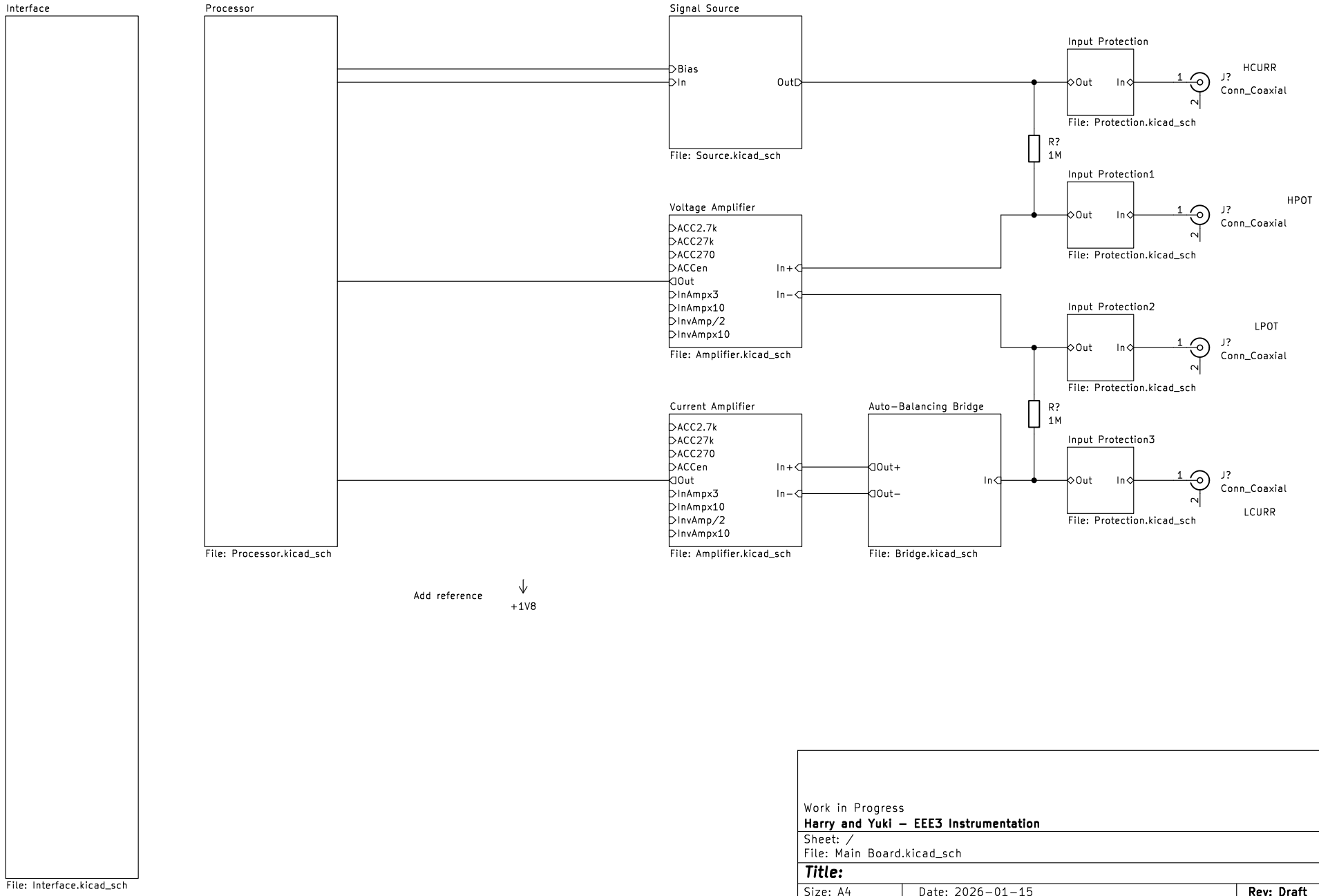

Work in Progress

Harry and Yuki – EEE3 Instrumentation

Sheet: /

File: Main Board.kicad_sch

Title:

Size: A4	Date: 2026−01−15	**Rev: Draft**
KiCad E.D.A. 9.0.5		Id: 1/12

Work in Progress

Harry and Yuki – EEE3 Instrumentation

Sheet: /Interface/

File: Interface.kicad_sch

Title:

Size: A4	Date: 2026-01-15	**Rev: Draft**
KiCad E.D.A. 9.0.5		Id: 2/12

Work in Progress

Harry and Yuki – EEE3 Instrumentation

Sheet: /Processor/

File: Processor.kicad_sch

Title:

Size: A4	Date: 2026-01-15	**Rev: Draft**
KiCad E.D.A. 9.0.5		Id: 3/12

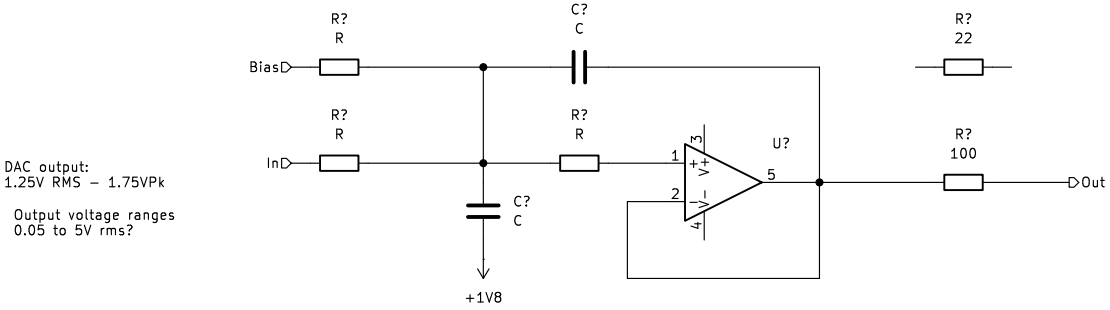

Work in Progress

Harry and Yuki – EEE3 Instrumentation

Sheet: /Signal Source/
File: Source.kicad_sch

Title:

Size: A4	Date: 2026-01-15	**Rev: Draft**
KiCad E.D.A. 9.0.5		Id: 4/12

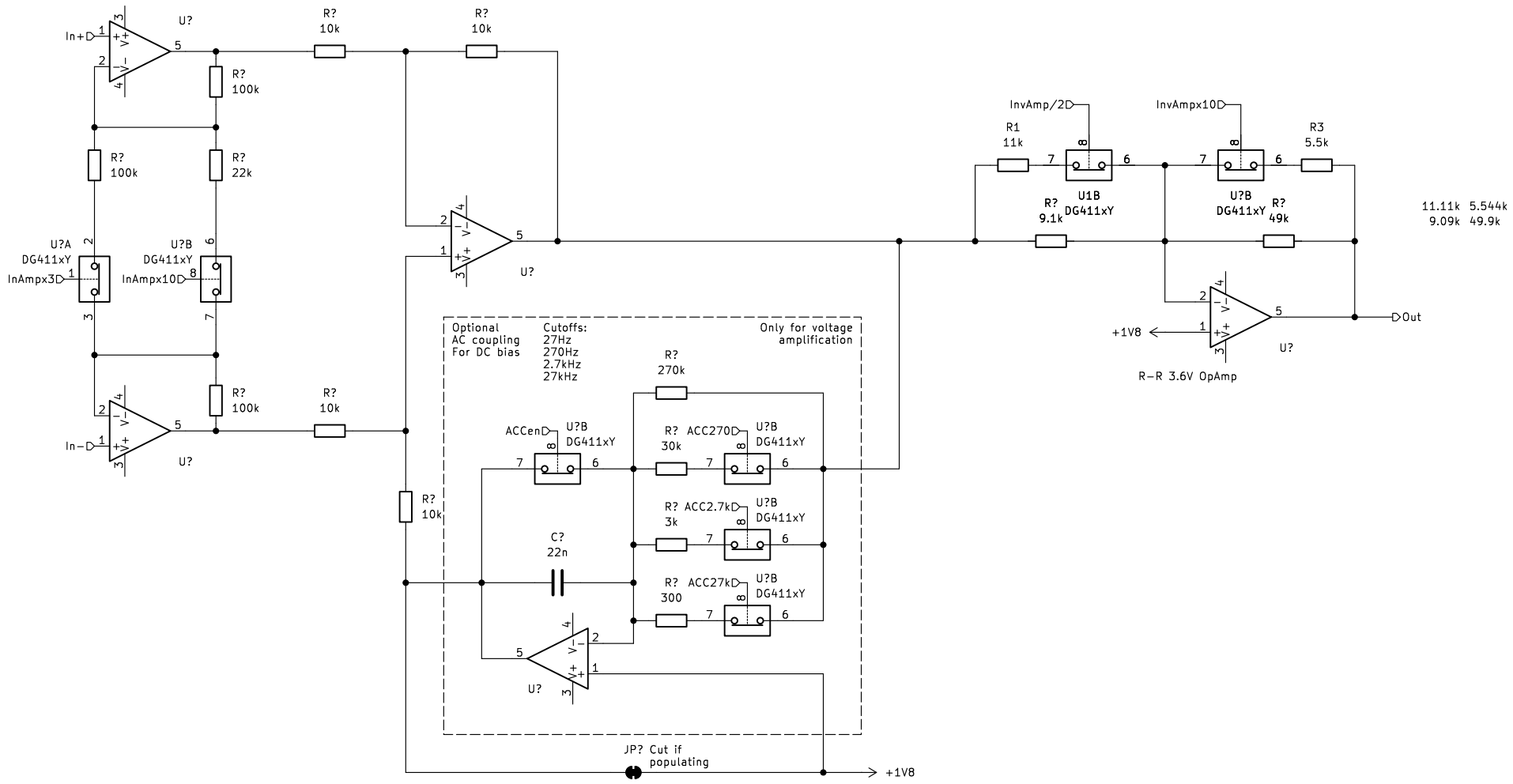

Work in Progress

Harry and Yuki – EEE3 Instrumentation

Sheet: /Voltage Amplifier/

File: Amplifier.kicad_sch

Title: Instrumentation Amplifier

Size: A4	Date: 2026-01-15	**Rev: Draft**
KiCad E.D.A. 9.0.5		Id: 5/12

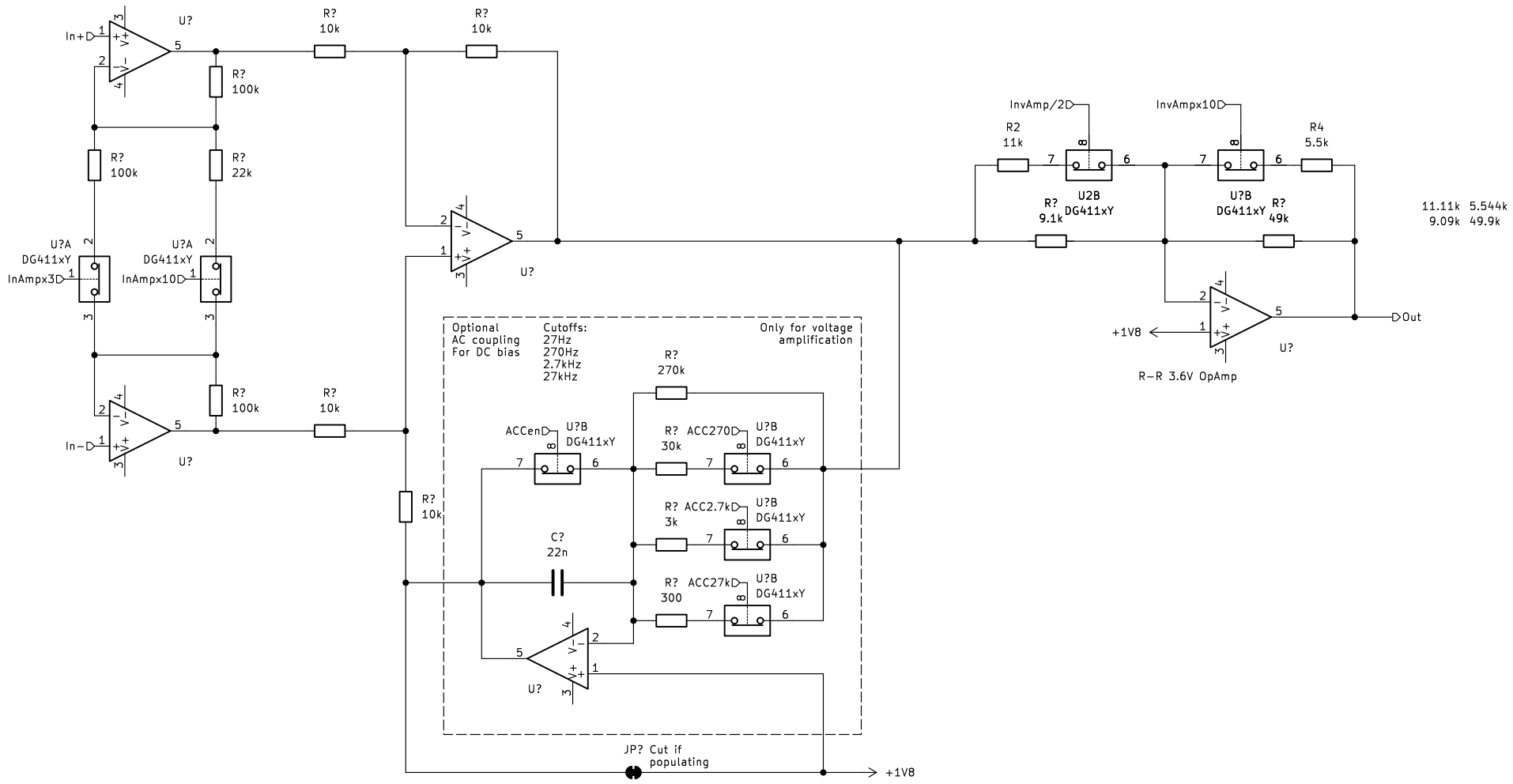

Work in Progress

Harry and Yuki – EEE3 Instrumentation

Sheet: /Current Amplifier/

File: Amplifier.kicad_sch

Title: Instrumentation Amplifier

Size: A4	Date: 2026-01-15	**Rev: Draft**
KiCad E.D.A. 9.0.5		Id: 6/12

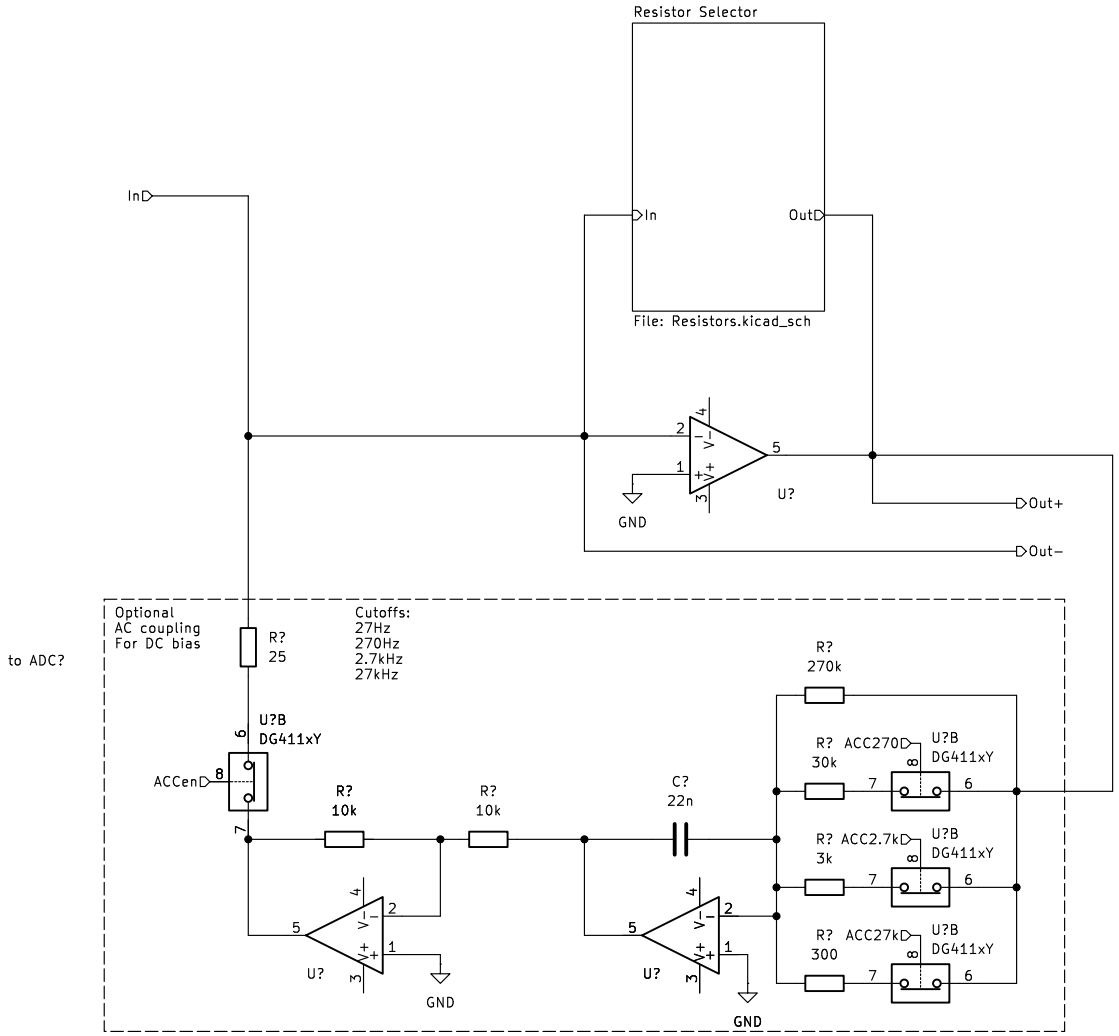

Work in Progress

Harry and Yuki – EEE3 Instrumentation

Sheet: /Auto-Balancing Bridge/

File: Bridge.kicad_sch

Title:

Size: A4	Date: 2026-01-15	**Rev: Draft**
KiCad E.D.A. 9.0.5		Id: 7/12

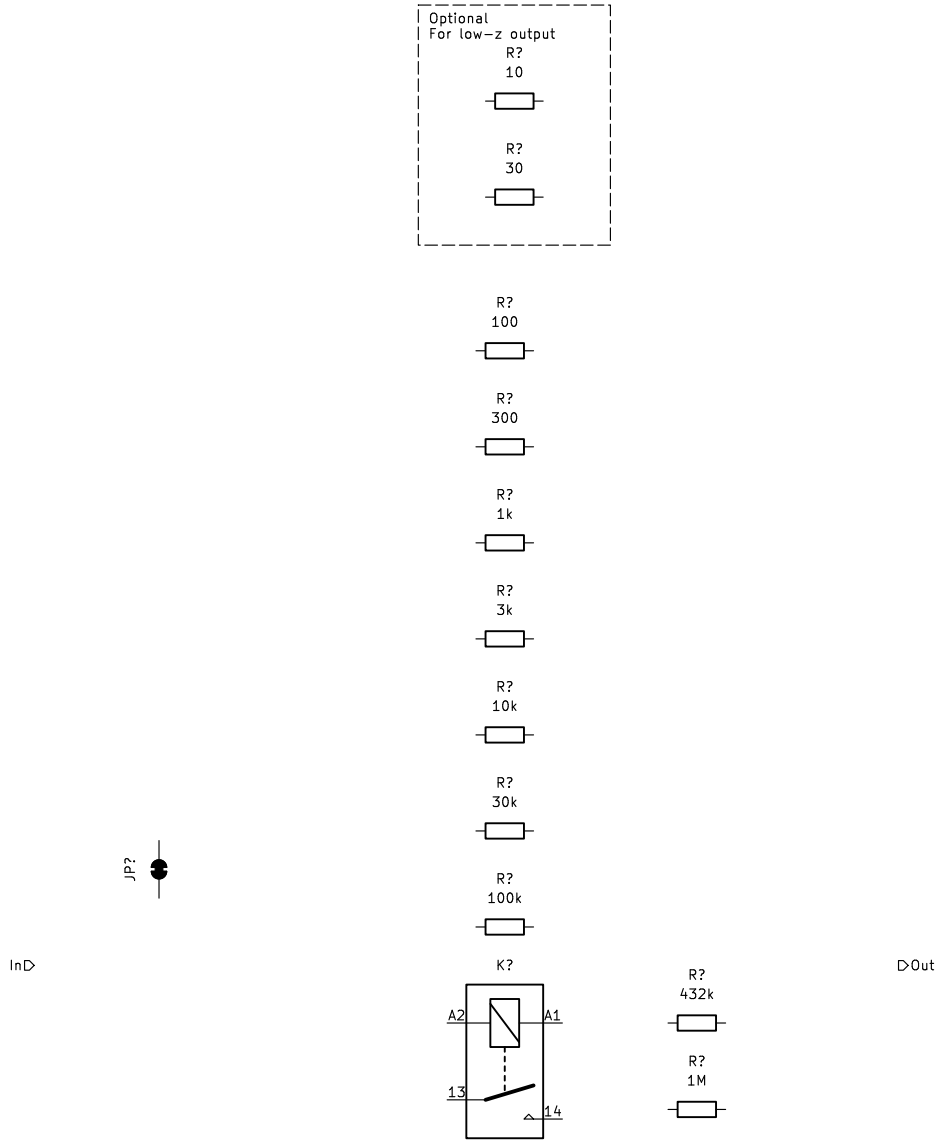

Harry and Yuki – EEE3 Instrumentation

Sheet: /Auto-Balancing Bridge/Resistor Selector/
File: Resistors.kicad_sch

Title:

Size: A4	Date:	**Rev:**
KiCad E.D.A. 9.0.5		Id: 12/12

In◇ ◇Out

Work in Progress
Harry and Yuki – EEE3 Instrumentation
Sheet: /Input Protection/
File: Protection.kicad_sch

Title:

Size: A4	Date: 2026-01-15	**Rev: Draft**
KiCad E.D.A. 9.0.5		Id: 8/12

In◇ ◇Out

Work in Progress
Harry and Yuki – EEE3 Instrumentation
Sheet: /Input Protection1/
File: Protection.kicad_sch

Title:

Size: A4	Date: 2026-01-15	**Rev: Draft**
KiCad E.D.A. 9.0.5		Id: 9/12

In◇ ◇Out

Work in Progress
Harry and Yuki – EEE3 Instrumentation
Sheet: /Input Protection2/
File: Protection.kicad_sch

Title:

Size: A4	Date: 2026-01-15	**Rev: Draft**
KiCad E.D.A. 9.0.5		Id: 10/12

In◇ ◇Out

Work in Progress
Harry and Yuki – EEE3 Instrumentation
Sheet: /Input Protection3/
File: Protection.kicad_sch

Title:

Size: A4	Date: 2026-01-15	**Rev: Draft**
KiCad E.D.A. 9.0.5		Id: 11/12